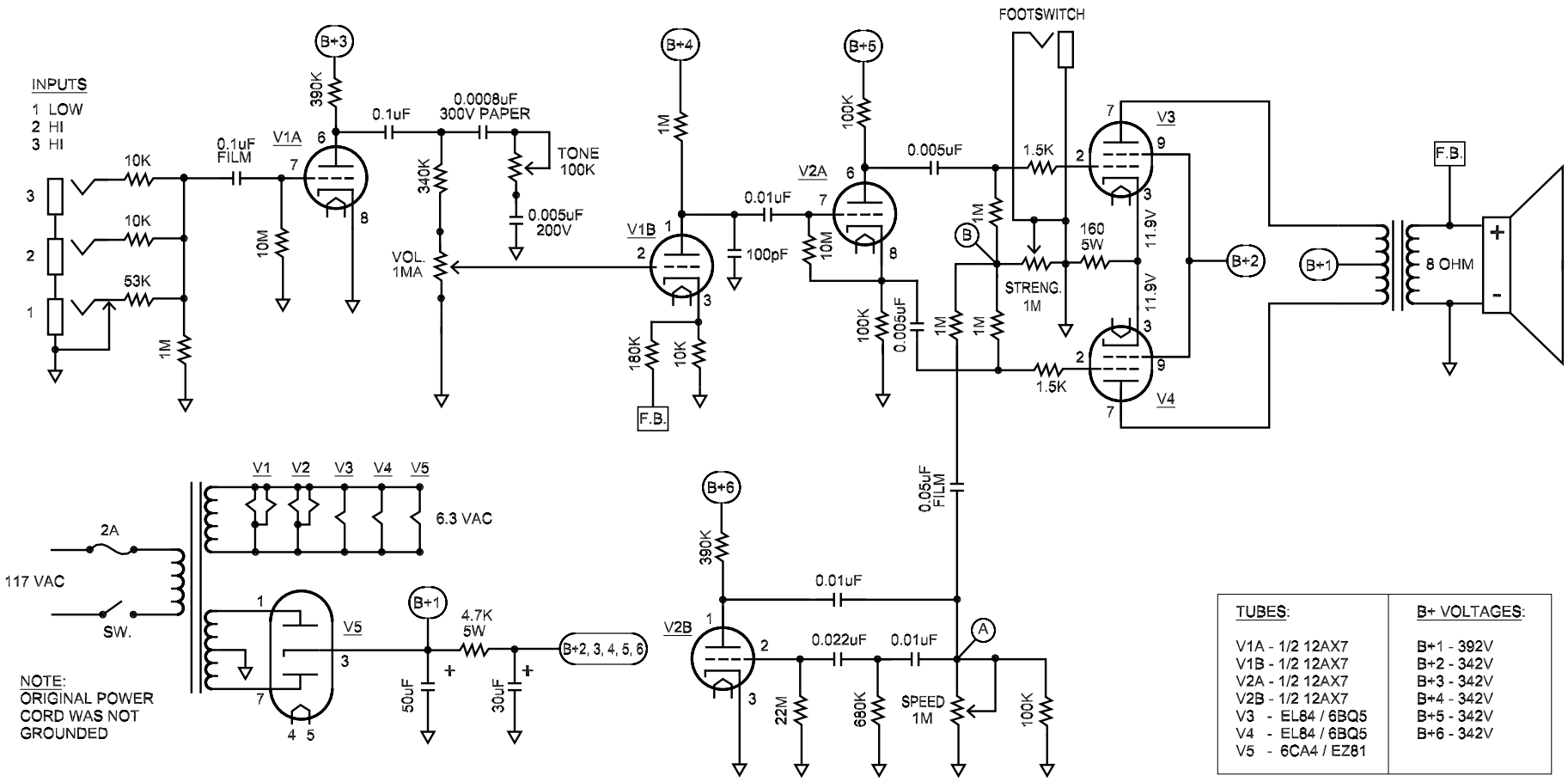

TUBES:	B+ VOLTAGES:
V1A - 1/2 12AX7	B+1 - 392V
V1B - 1/2 12AX7	B+2 - 342V
V2A - 1/2 12AX7	B+3 - 342V
V2B - 1/2 12AX7	B+4 - 342V
V3 - EL84 / 6BQ5	B+5 - 342V
V4 - EL84 / 6BQ5	B+6 - 342V
V5 - 6CA4 / EZ81	

NOTES:

1. ALL RESISTORS 1/2 WATT CARBON COMP UNLESS NOTED OTHERWISE.
2. ALL CAPS 1kV CERAMIC UNLESS NOTED OTHERWISE.
3. TREMOLO POTS ARE DUAL GANGED 1M. STRENGTH CONTROL USES ONLY ONE HALF OF POT.

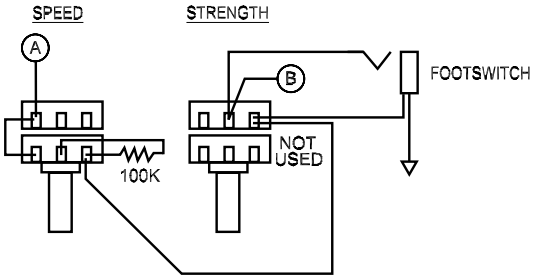

TREMOLO CONTROL WIRING

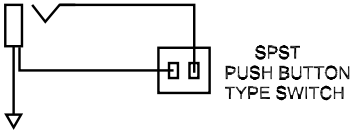

FOOTSWITCH WIRING

Gregory MARK X

SCHEMATIC

DRAWN BY PAUL MAROSSY 5/22/05

NOTE: THIS SCHEMATIC WAS DERIVED FROM THE ORIGINAL SCHEMATIC ATTACHED TO THE AMPLIFIER. USE AT YOUR OWN RISK.

Sheet: 1